NOTES:
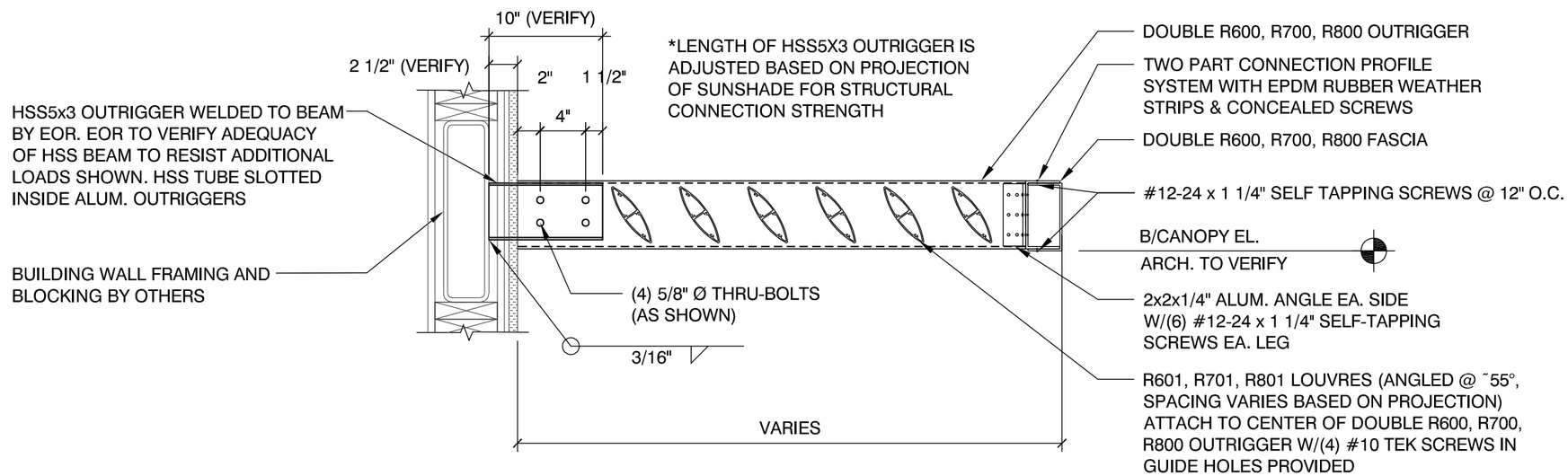
1. THIS DESIGN FOR ANCHORAGE TO EXISTING STRUCTURE ONLY. BUILDING DESIGNER TO VERIFY ADEQUACY OF STRUCTURE TO RESIST ADDITIONAL LOADING SHOWN. THIS ENGINEER NOT RESPONSIBLE FOR THE EXISTING STRUCTURE.
2. ALL BOLTS, NUTS, WASHERS, EYEBOLTS, EXPANSION BOLTS, PLATES, ETC. TO BE GALVANIZED STEEL AND COATED WITH DELTA SEAL.